7.2 Power Board

715G2824 1 11

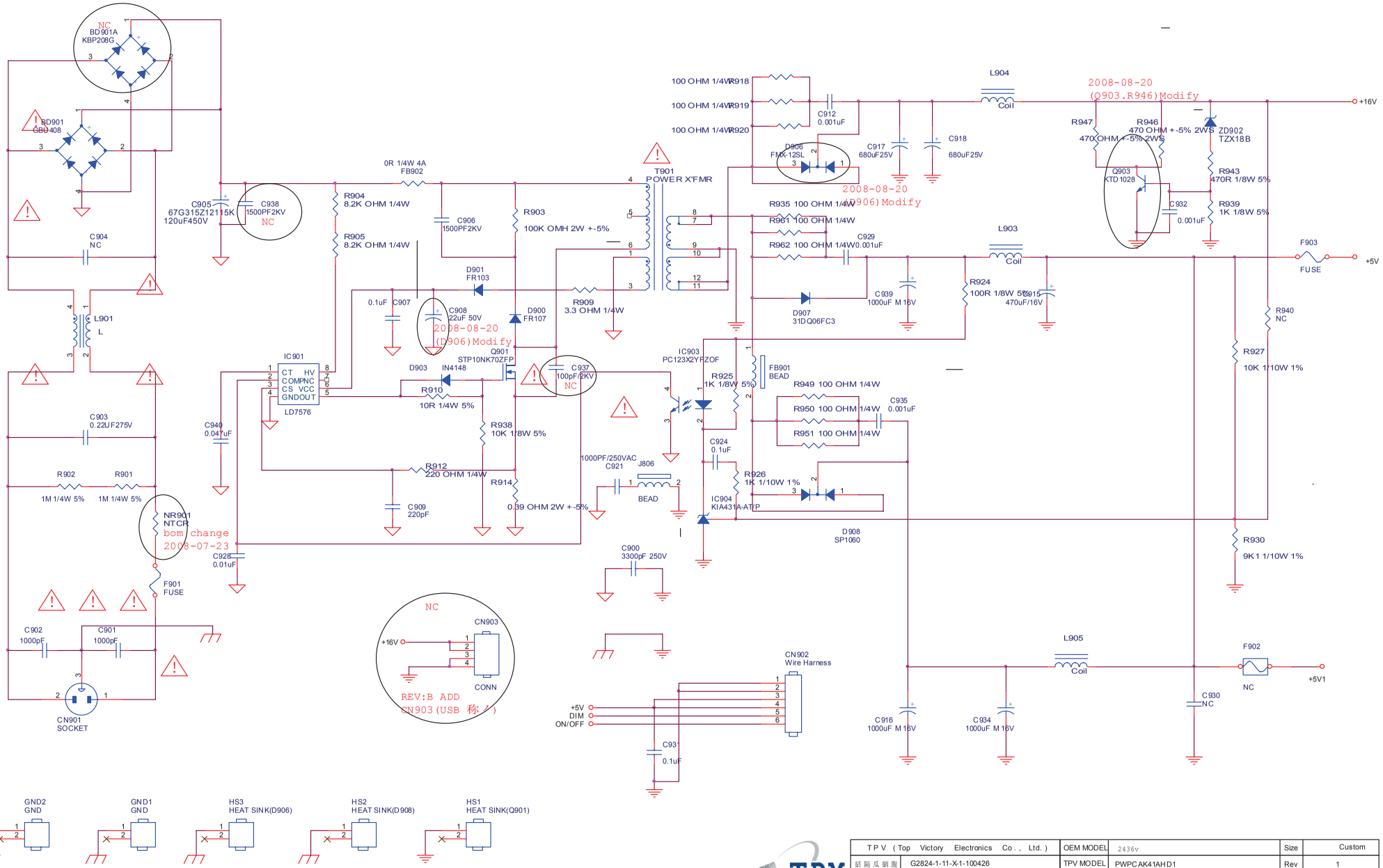

TPV (Top Victory Electronics Co., Ltd.)		OEM MODEL	2436v	Size	Custom
結構瓜鋼腹	G2824-1-11-X-1-100426	TPV MODEL	PWPCAK41AHD1	Rev	1
Key Component	03.POWER	PCB NAME	715G2824-1-11	称爹	ODM MODEL
Date	Tuesday, April 27, 2010	Sheet	3 of 3		

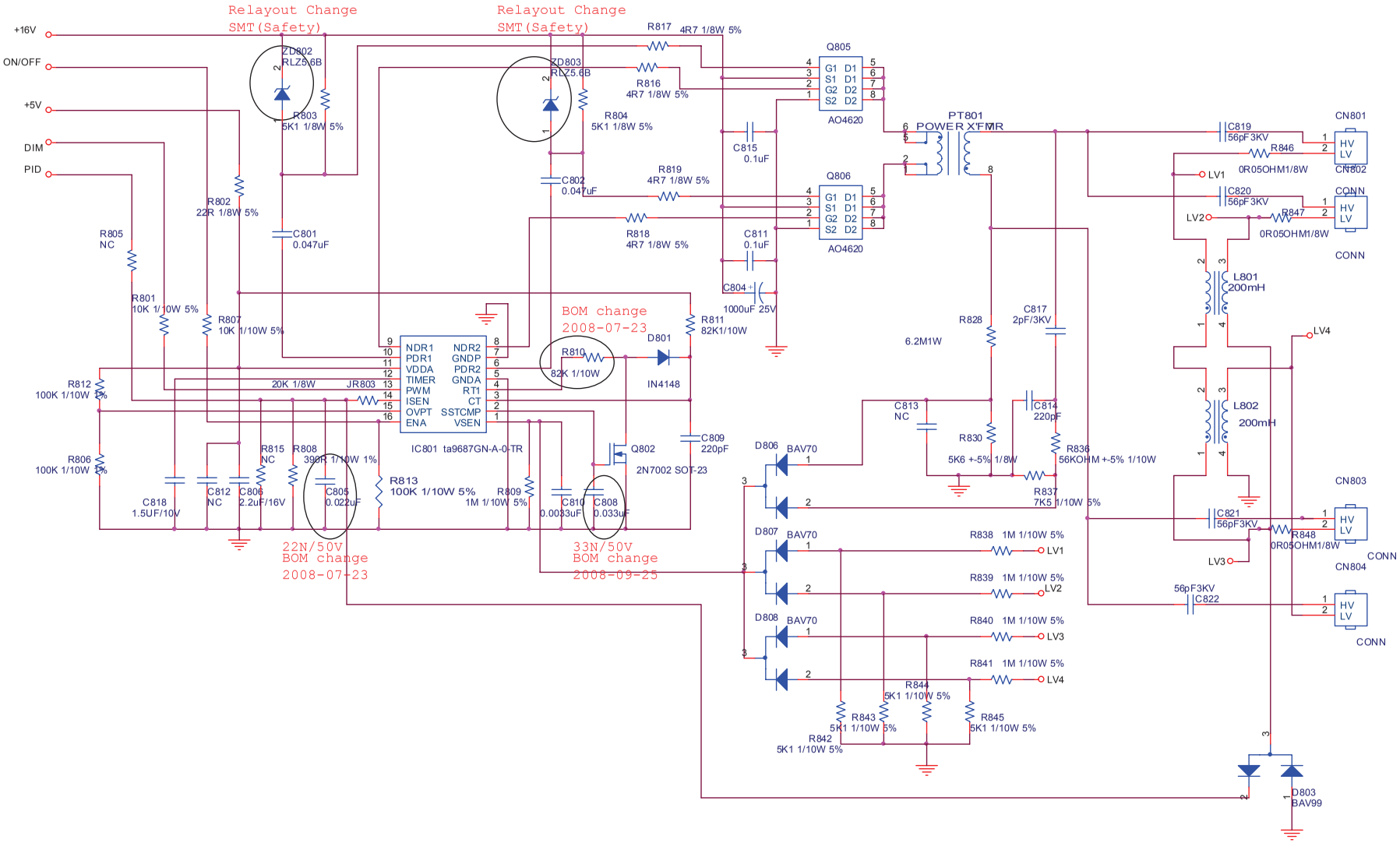

TPV (Top Victory Electronics Co., Ltd.)		OEM MODEL	2436v	Size	Custom
結隔瓜鋼腹	G2824-1-11-X-1-100426	TPV MODEL	PWPCAK41AHD1	Rev	1
Key Component	02.INVERTER	PCB NAME	715G2824-1-11	称爹	ODM MODEL
Date	Tuesday, April 27, 2010	Sheet	2 of 3		

8.2 Power Board

715G2824 1 11

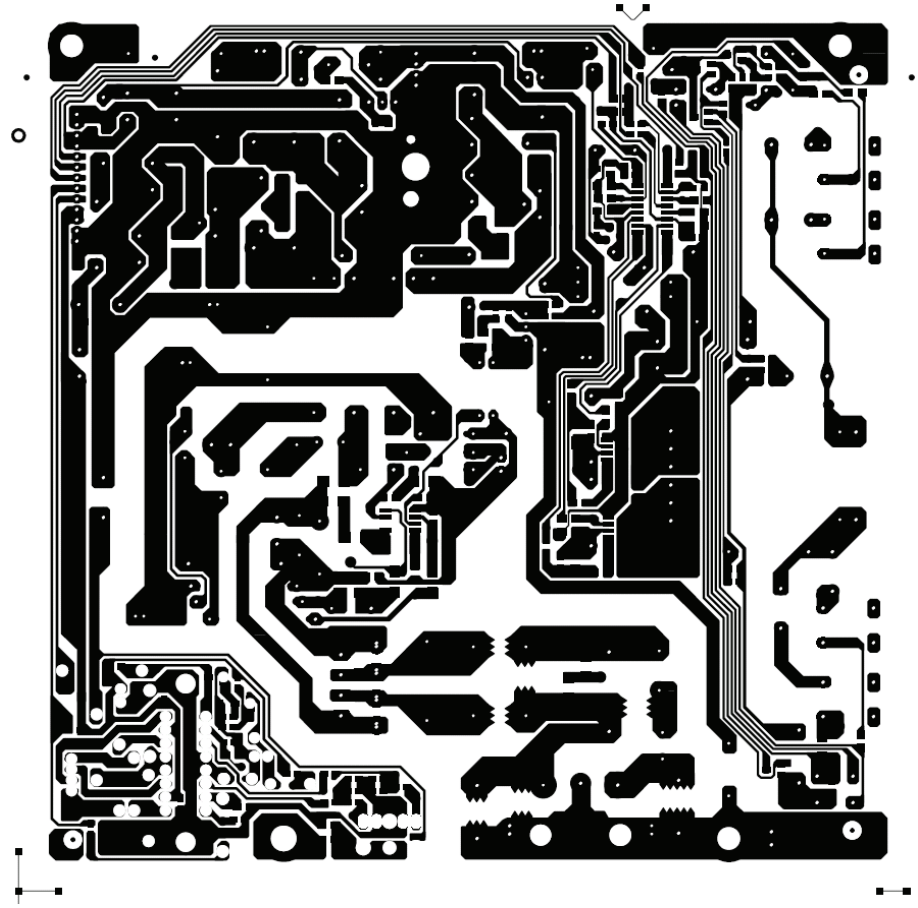

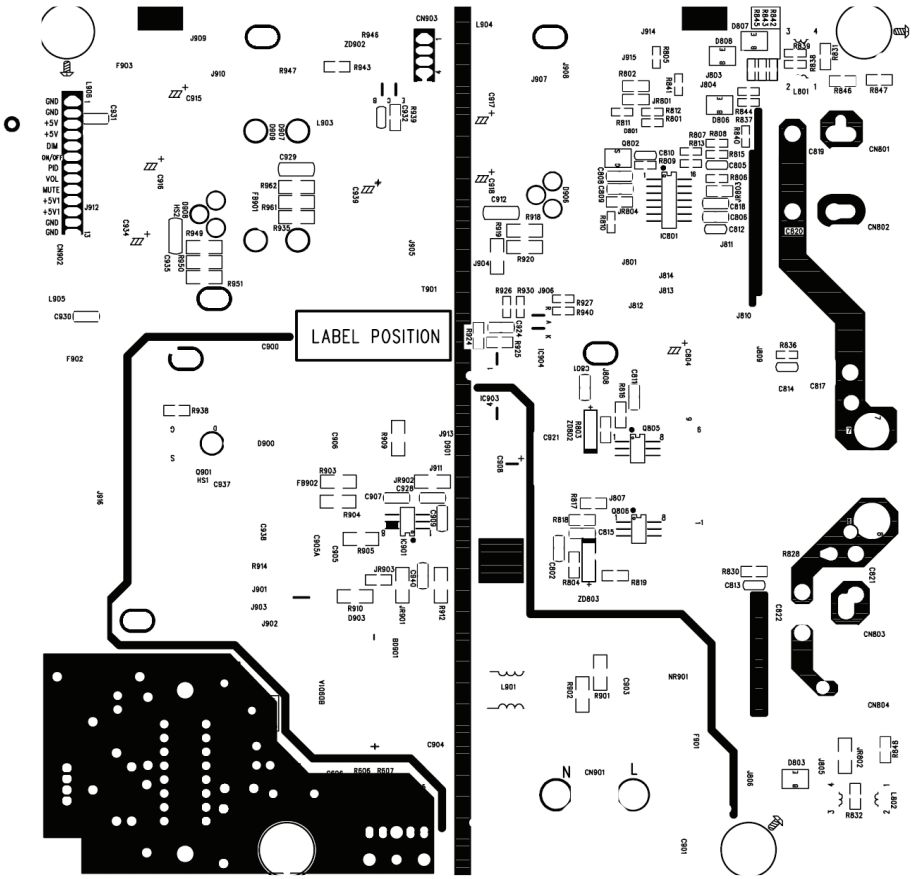

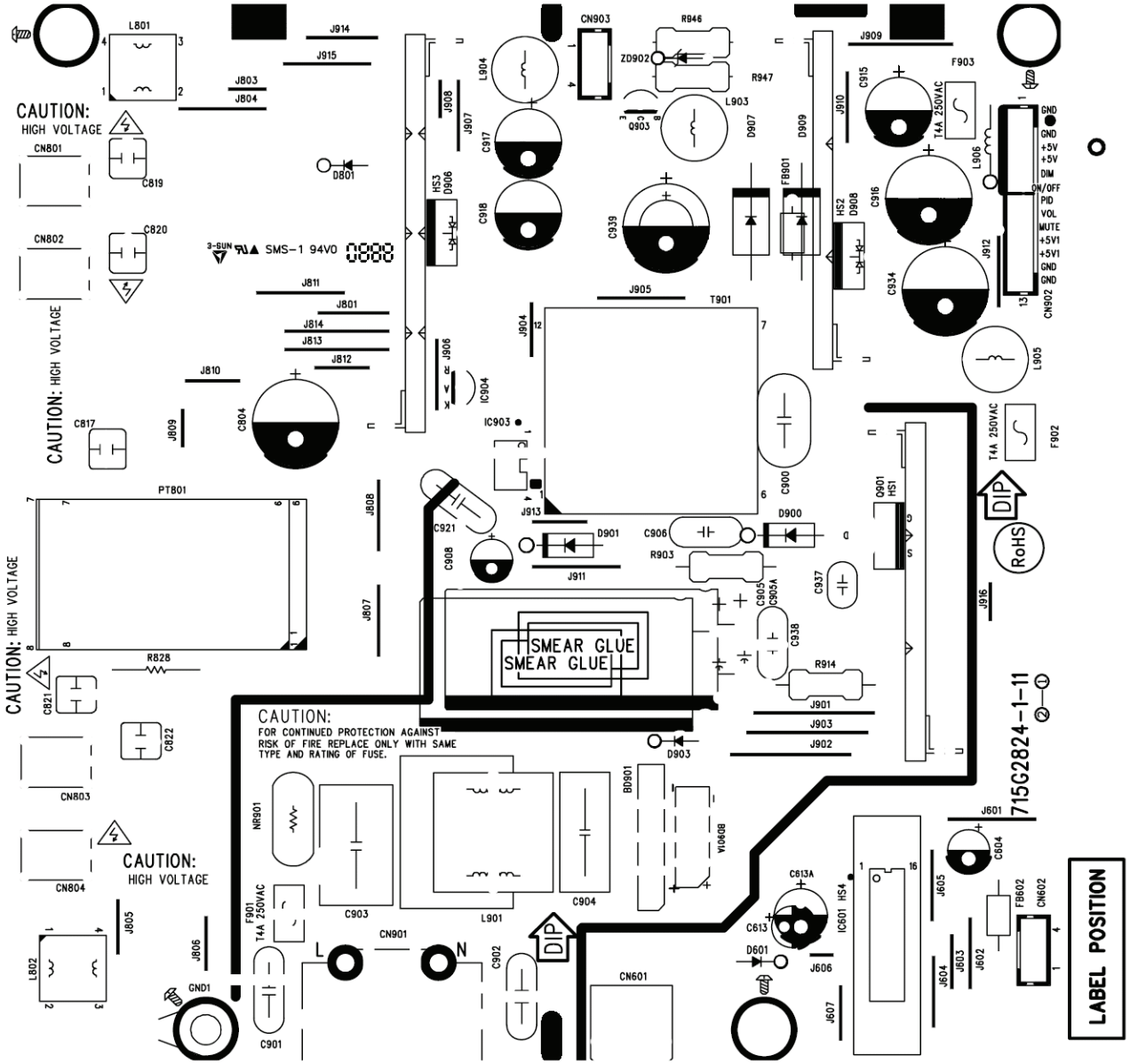
CAUTION:
HIGH VOLTAGE
CAUTION: HIGH VOLTAGE
CAUTION: HIGH VOLTAGE
CAUTION:
HIGH VOLTAGE
CAUTION:
FOR CONTINUED PROTECTION AGAINST
RISK OF FIRE REPLACE ONLY WITH SAME
TYPE AND RATING OF FUSE.
SMEAR GLUE
SMEAR GLUE
SMS-1 94V0
DIP
RoHS
715G2824-1-11
LABEL POSITION
L
N
GND1
GND
GND
+5V
+5V
DIM
ON/OFF
PID
VOL
MUTE
+5V1
+5V1
GND
GND